MAX TEMP: 1652°F / 900°C	POWER: 18kW - 36kW
MAX. AIR PRESSURE: 60 PSI	MAX SCFM: 57 SCFM

GET A QUOTE DETERMINE YOUR HEATER

Max HT Air Heaters

Temperatures up to 1652°F / 900°C
6kW - 36 kW
Built-in Type K thermocouples
Built-in Flow Loss Protection
Three Phase

Applications: aerospace, automotive, electronics, plastics, medical, food & beverage, printing, OEM systems

The Max HT combines extreme temperatures and high airflow

The **TUTCO SureHeat Max HT** is a high-power, robust **inline process air heater** engineered for demanding industrial applications that require extreme temperatures, precise control, and long service life. With outlet temperatures up to **1652 °F (900 °C)**, the Max HT is designed for OEM systems, regenerative or compressed air blowers, and continuous industrial operations where standard heaters cannot meet the heat or reliability demands.

Featuring TUTCO's **Serpentine™ coil design**, the Max HT delivers superior heat transfer, rapid ramp-up, and extended element life. Each unit comes with **two built-in Type K thermocouples (inlet and outlet)** for accurate air temperature measurement and is fully compatible with TUTCO SureHeat Control Panels for precise voltage control, overshoot protection, and closed-loop operation. Available in **3-phase configurations** with power ratings from **6kW to 36kW**, the Max HT is ideal for high-temperature, high-volume process applications.

Made in the USA and backed by decades of expertise, the Max HT delivers heavy-duty performance for manufacturers worldwide.

Discover which Max HT heater is ideal for your application

Use the table below to determine the optimal Max HT heater for your application, or contact TUTCO SureHeat to discuss specific process requirements and receive expert support.

Features & Benefits

- **Extreme Temperature Capability** – Reaches up to 1652 °F (900 °C) for the most demanding industrial processes.
- **Serpentine™ Coil Design** – Maximizes heat transfer, accelerates ramp-up, and extends element life.
- Dual **Built-in Type K Thermocouples (Inlet and Outlet)** – Ensures accurate, real-time temperature monitoring.
- **Control Panel Integration** – Seamlessly compatible with standard or custom TUTCO SureHeat panels for precise voltage regulation and overshoot protection.
- **Flexible Power Options** – Available in 3-phase configuration, multiple voltages, and high kW ratings up to 36 kW.
- **Durable Stainless Steel Construction** – Engineered for rugged industrial environments.
- **Compact Inline Design** – Allows easy installation into OEM systems or retrofits.
- **Certifications:** UL Recognized, CE, RoHS

Specifications

- **Maximum Air Temperature:** Up to 1652 °F (900 °C)
- **Power Ratings:** 18kW to 36kW (custom options available)
- **Voltage & Phase Options:** 3-phase; multiple voltages
- **Maximum Air Pressure:** 60 psi
- **Maximum Inlet Temperature:** 200 °F (93 °C)
- **Thermocouples:** Built-in Type K
- **Construction:** Stainless steel body with threaded inline connections
- **Airflow Compatibility:** Designed for low to high volume airflow
- **Control:** Compatible with TUTCO SureHeat Control Panels; built-in thermocouples
- **Mounting Options:** Inline threaded or flange mount

Industries & Applications

The Max HT is engineered for high-temperature, high-volume process applications across a wide range of industries, providing robust, reliable heating where precision and durability are critical:

- **Aerospace & Defense** – Ideal for composite curing, component testing, thermal simulations, and de-icing systems, delivering consistent high temperatures that meet strict industry standards.
- **Automotive & Transportation** – Supports processes such as welding, adhesive curing, drying, heat treating, and forming, helping manufacturers maintain quality and efficiency on high-volume production lines.
- **Electronics & Semiconductor** – Provides precise solder reflow, wafer processing, high-temperature drying, and component sealing, ensuring uniform results for sensitive, high-value components.
- **Food & Beverage** – Excellent for drying, sterilization, baking, shrink-wrapping, and coating, offering controlled, clean heat for safe and efficient food processing.
- **Medical & Pharmaceutical** – Perfect for sterilization, packaging, lab testing, and precision drying, helping facilities maintain regulatory compliance and process reliability.
- **Plastics & Packaging** – Optimized for forming, sealing, heat shrinking, and film processing, delivering uniform heat for consistent material performance.
- **Printing & Converting** – Supports ink drying, laminating, coating, embossing, and other finishing processes, ensuring high-quality output and minimal defects.
- **General Industrial Manufacturing** – Handles hot air knives, drying tunnels, and custom OEM machinery, providing the high heat and durability needed for challenging industrial environments.

FureHeat

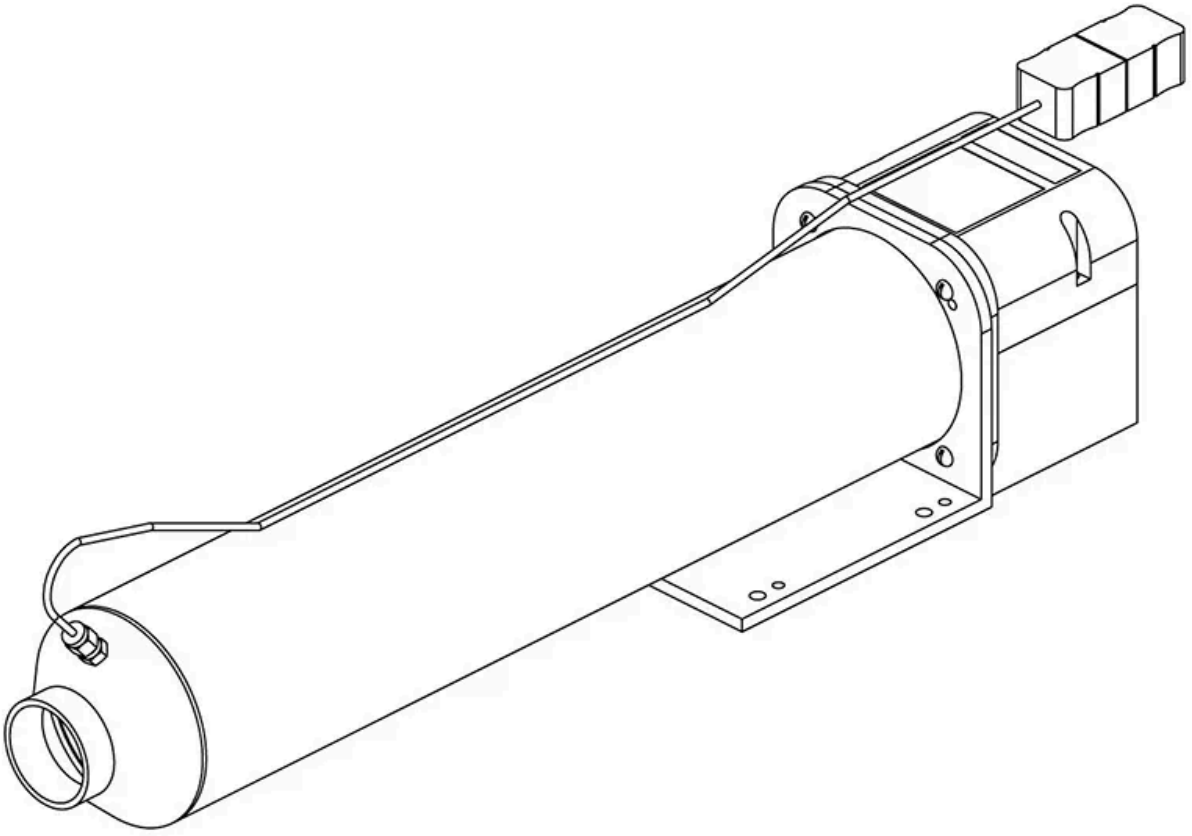

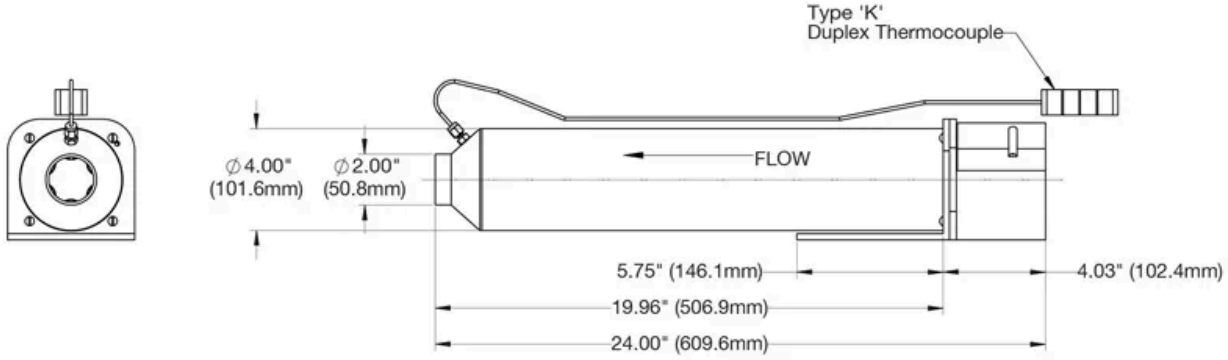
Type 'K'
Duplex Thermocouple
FLOW
∅4.00"
(101.6mm)
∅2.00"
(50.8mm)
5.75" (146.1mm)
4.03" (102.4mm)
19.96" (506.9mm)
24.00" (609.6mm)

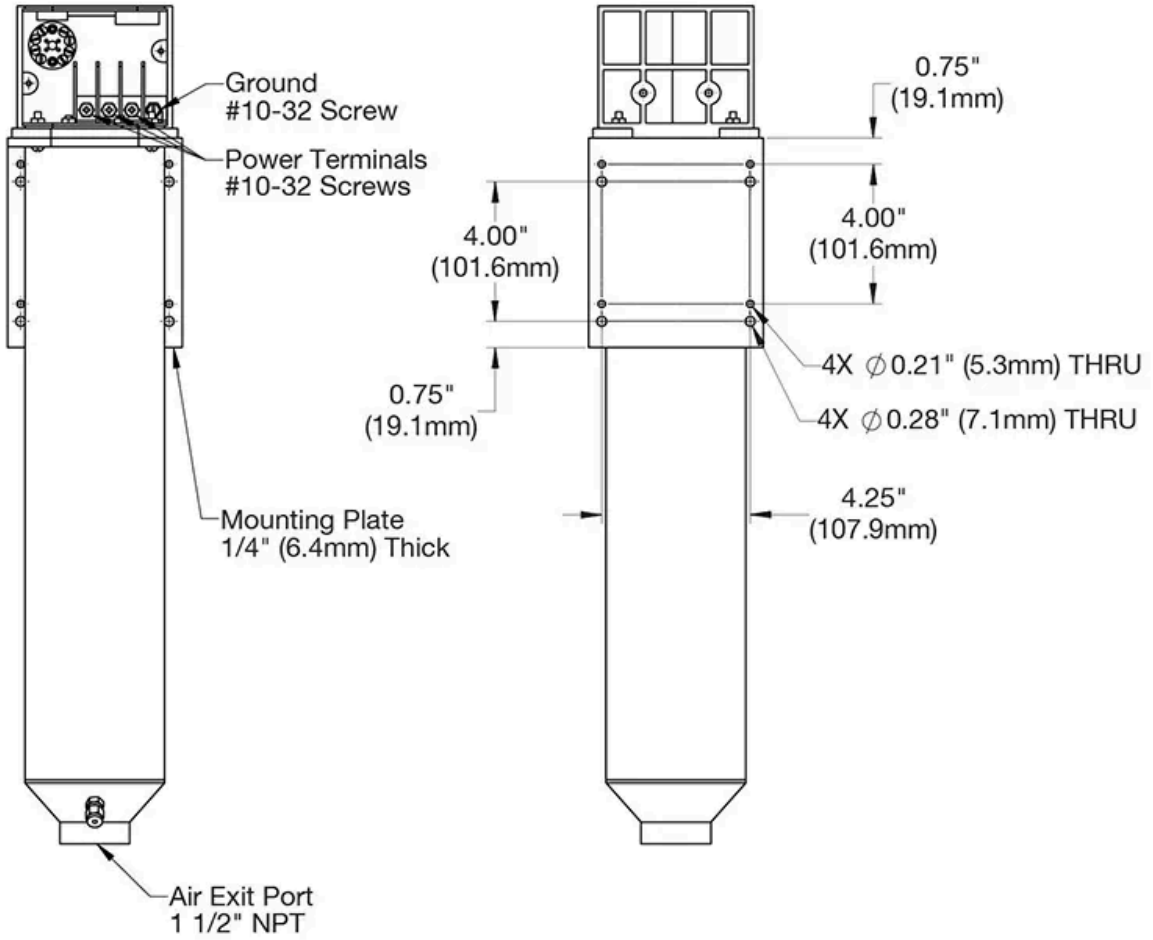
Ground
#10-32 Screw
Power Terminals
#10-32 Screws
Mounting Plate
1/4" (6.4mm) Thick
Air Exit Port
1 1/2" NPT
0.75"
(19.1mm)
4.00"
(101.6mm)
4.00"
(101.6mm)
0.75"
(19.1mm)
4X ∅0.21" (5.3mm) THRU
4X ∅0.28" (7.1mm) THRU
4.25"
(107.9mm)

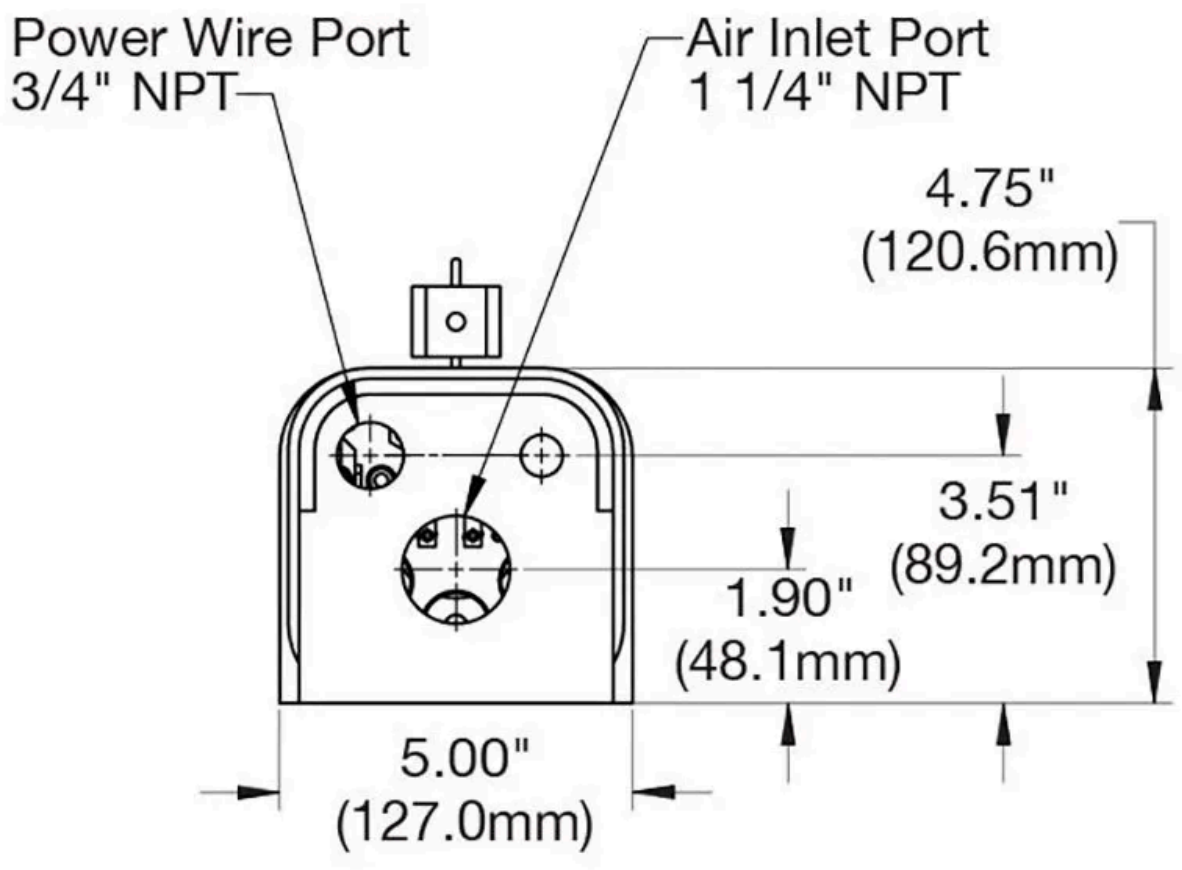

A Line of Industrial Control Solutions from the Heating Experts

TUTCO's depth of expertise uniquely qualifies us to manufacture control panels for the heaters we produce, as reflected in our unwavering commitment to quality. Our engineers have leveraged the latest technology in heater controls and safety features to create a line of totally customizable controllers well-suited for industrial facilities and OEMs. Our controllers utilize power controllers, temperature controllers, and thermocouples to continuously monitor and maintain consistent output voltages to the heater.

Regardless of fluctuations in the process or changes in airflow, the temperature is continually monitored to meet process requirements and safeguard the heater. Each controller features LAN connectivity via an RJ45 port, which allows the controller to communicate and retrieve data from a remote HMI or another external device, such as a data logger or webpage.

Closed-Loop (Feedback) Control

Closed-loop heater control systems use a power controller, temperature controller, and thermocouple to monitor and maintain a constant output temperature, regardless of changes in airflow. The typical temperature controller provides a convenient display of the air temperature (not the element temperature).

Temperature Controller

- Use only digital temperature controllers with Type K thermocouple inputs.
- The temperature control output must match the input of the power controller (e.g., 4–20 mA or 0–10 VDC).
- A standard PID-type control with a wide proportional band works best to minimize temperature overshoot.
- PID parameters may be auto-tuned, but only at temperatures below the maximum rating of the heater. Monitor the heater temperature rise and turn power off immediately if it exceeds the heater's specification during the auto-tune cycle.

Power Controller

SCR (Silicon Controlled Rectifier) power controllers provide the smoothest power regulation for electric air heaters. Power controllers, such as SSR (Solid State Relays) or other fast-switching controllers are also used with our heaters. Contact TUTCO SureHeat for details.

Learn More About Controllers

Resources

MANUALS
Quickstart Guide
Operating Manual

BROCHURES
Max HT Data Sheet

VIDEOS
Air Heaters
Instaling a Max Heater

Why Choose TUTCO SureHeat

Industry Expertise: With decades of experience in industrial heating solutions, TUTCO SureHeat is a trusted name in the industry.
Reliable Performance: Our heaters are designed for consistent, repeatable results, ensuring quality and efficiency in your processes.
Comprehensive Support: We offer technical support, custom solutions, and integration assistance to meet your specific needs.
Global Reach: Our products are used worldwide, providing proven solutions in various industries.

The TUTCO SureHeat Max HT redefines what's possible in high-power inline air heating, delivering unmatched performance in extreme temperature environments. Built for continuous operation and trusted by OEMs and manufacturers worldwide, it provides the precision, reliability, and durability that demanding processes require. When standard heaters fall short, the Max HT ensures consistent results, longer element life, and the confidence to keep your operations running at peak efficiency.

Frequently Asked Questions

WHAT INDUSTRIES BENEFIT MOST FROM USING THE MAX HT? —

The Max HT serves a wide range of high-temperature industrial applications—including aerospace, automotive, electronics, medical, packaging, and general manufacturing—where durability, precision, and consistent heat are critical to process quality and throughput.

CAN THE MAX HT INTEGRATE WITH CONTROL SYSTEMS? —

Yes. The Max HT is fully compatible with TUTCO SureHeat Control Panels, providing closed-loop operation with precise voltage regulation, overshoot protection, and stable performance under variable airflow and temperature conditions.

WHAT POWER AND CONFIGURATION OPTIONS ARE AVAILABLE? —

The Max HT operates in 3-phase configurations with power ratings from 18 kW to 36 kW and multiple voltage options. Custom configurations are available to match specific process and system requirements.

WHAT MAKES THE TUTCO SUREHEAT MAX HT DIFFERENT FROM OTHER INLINE HEATERS? —

The Max HT combines extreme temperature capability—up to 1652 °F (900 °C)—with high airflow performance. Its patented Serpentine™ coil design ensures efficient heat transfer, rapid response times, and long element life, making it ideal for the most demanding industrial heating applications.

Part numbers: F077082, F077083, F077081, F076518, F078600, F077084, F077085, F078601, F076189, F076250